2011

SAILOR 100th Anniversary 2011 100th since 1911

SAILOR The Sailor Pen Co., Ltd.

Robotics Division URL: http://www.sailor.co.jp/robotics
E-mail : info@robot.sailor.co.jp

■**JAPAN**
The Sailor Pen Co., Ltd. Robotics Division
6-15-27 Shinmachi Ome-city, Tokyo 198-0024
TEL：81-428-31-8711 FAX：81-428-31-8717

■**U S A**
Sailor Automation, Inc.
981 Via Rodeo Placentia, CA 92870 U.S.A.
TEL：1-714-528-7711 FAX：1-714-528-0044
URL：www.sailorautomation.com
E-mail：info@sailorautomation.com

■**THAILAND**
The Sailor (Thailand) Co.,Ltd.
89/1 Moo 5 Romklow Rd.,Klong Sampraves,
Lardkrabang Bangkok 10520 THAILAND
TEL：66-2-737-8391 FAX：66-2-360-8724

■**VIETNAM**
The Sailor (Thailand) Co., Ltd. Hanoi Representative Office
1701, A Tower, Keangnam Hanoi,
Pham Hung Blvd., Cau Giay District, Hanoi, VIETNAM
TEL：84-4-3995-3313 FAX：84-4-3995-3313

■**CHINA**
Sailor Robot (Shanghai) Co.,Ltd.
33-D-1F, Fuhua Road, Jiading, Shanghai 201818 CHINA
TEL：86-21-5990-7010 FAX：86-21-5990-7016

Representatives

● Please note that the specifications and other information within this catalogue may be revised without notice, due to our ongoing product research improvement efforts.

RZ-ΣII

High-Speed & Accurate Extraction Robots Sigma

SAILOR

Unification of Sailor Technology

1110E2000S2

Technology

■ RZ-Σ(Sigma)Ⅱ Series is a new standard model of Sailor Robots, equipped with many functions to meet customer' s requirements.

High-Speed & Accurate Extraction Robots

New Standard Model

High Efficiency | High Performance | Energy -Saving

Sigma

Excellent Rigidity

Constructed with rigid materials to efficiently suppress vibration and minimize shaking while use with heavy payloads. This allows for high-speed and accurate movements.

■ The horizontal frame of the optimum sectional shape with a high rigidity by original development is adopted.

Simple Design & Durable

All axes utilize Rack & Pinion direct drive. The construction is simple, but provides ultimate durability for extended robot life and continued accuracy.

■ It' s easier to modify from 2 plate specification to 3 plate specification.

Operator Friendly

Touch panel controller of 7 inch wide display is compact, light, and easy to operate. It makes your setup time greatly shorter than ever.
The wireless handy pendant, "very first in the industry"is also available. (optional)

■ The touch panel screen where visibility and convenience are pursued is adopted.
Controller : See next page for details

Energy -Saving

Air consumption is reduced by 40%

The amount of air used is reduced by 40%,compared with any models before. As a result, power consumption is greatly decreased, and it contributes to the reduction in the amount of the CO_2 exhaust. (Optional)

■ Take-Out Dry Cycle

less than **0.8 sec**

■ Overall Dry Cycle

less than **5.0 sec**

※Measured using the RZ-ΣⅡ
※800mm Vertical Stroke・1400mmTraverse Sroke

Design

A suitable styling for RZ-ΣⅡ, equipped with high functions, "Strength, Solidity, High Speed, and Precision" is pursued. The frames are composed of an original curve section, and a stylish and strong body has been achieved.
The white and marine blue color scheme emphasizes its unique build, cleanliness and superior capabilities.

Touch Panel Controller

New Design - Large Screen Touch Panel

The resolution and operability have improved further by 7 inch wide screen with WVGA (800x480) and 240,000 colors. It's possible to set up 5 axis in the same screen and access any screen in a second through the menu bar.

Pursuit of functionality

Blue elasticity resin of the touch panel perimeter eases the shock. Since The Both-Hands Grip System is adopted, it can be hold firmly. The functional design is pursued by the button arrangement in consideration of the time of operation and emergency.

Adoption of highly efficient CPU

By adopting highly efficient CPU, variegated functions including teaching are substantial. Moreover, there is high reliability with diskless structure.

Supports 5 languages

The language display corresponds to five languages, Japanese, English, Thai, Korean, and Chinese.

Camera

The situation of the site can be checked in real time via the internet. (Optional)

LAN Port

A cable does not become obstructive by arranging a port in the undersurface of the touch panel. (Please prepare the LAN cable)

USB Port

The pendant is equipped with 2 USB ports. USB drive, wireless LAN, USB camera can be used. The mold data and the alarm/operation history can be saved onto the USB drive very easily. This function allows for improved productivity and process control. (Please prepare USB)

Main Menu Screen

The icons are arranged legible. Touch buttons identified by easy to follow color coding along with instant ON/OFF button recognition.

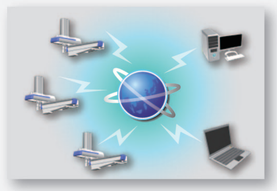

Remote Function

The situation of the site can be managed by connecting LAN (Wireless LAN is also acceptable) and the camera in the office via the internet. (for Windows)

(Optional)

Wireless Function

Wireless communication with the handy pendant becomes possible by installing a wireless unit in the pendant. Because it's a wireless, adjustment of position, timer, speed, etc. can be done from non-operator side easily.
One (1) wireless pendant can control multiple robots. (Optional)

Cross-Keys

Utilizes Responsive Directional Controls.
It can control and operate each axis of the RZ-ΣII robot with ease.

Ten Key/Collision Prevent

Input settings with the 10 key number pad.The display of each axis as well as the setup range is organized for trouble-free operation. The Collision prevention function has been improved with the ability to automatically calculate the max/min values and alert the operator to prevent collision when teaching.

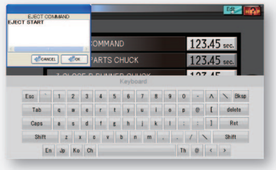

Name Edit Function

Default names of teaching data and timer can be changed using keyboard on the screen.
If your factory utilizes two or more different manufacturer's robots, you can change the names of positions and timers to what your operators are familiar with.

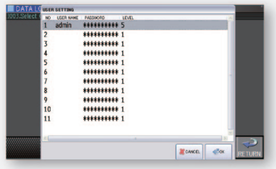

Login Function

The administrator and ten (10) other users can be registered.
The operation level of five stages can be set to each user.

Mold Data

Important mold data can be saved by the file manager form much easier than before.

Alarm/Operation History

Alarm history and history that is logged in and operated are plainly displayed.
Copy to USB drive is also possible.
The operation log screen can freely set the content of the log by an optional specification.

My Pro Function

With this software, your original program, like Position, Timer, Input/Output, etc. can be added freely. Furthermore, operation of parts-side axis and runner-side axis can be set up individually.

Help Function

The help comments, handling explanation, operator's manual, and action direction can be displayed. (in a Compact Flash Card)

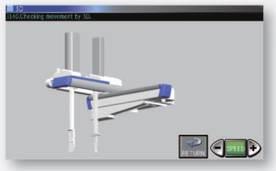

Simulation Function

The content of the condition setting of the teaching is displayed in animation.
Operation speed can be adjusted by four stages.
Because it is possible to confirm the operation setting roughly, it is useful for wrong setting prevention.

Screen Memo

A display screen can be copied to a USB memory as it is.

Specifications

Model identification

RZ - [ ] ΣII [ ] [ ] [ ] - M [ ] [ ]

- Traverse Type Extractor Robot
- Clamping Tonnage of Target Injection molding machine
- Series
- No.of vertical guides: S : Single Arm / W : Double Arm
- Unloading Direction: R : Operator Side / L : Non Operator Side
- Type of vertical guide: No indication means Standard(single guide) / T : means"Telescopic" Type with double guides
- No.of Servo motor: 3 : 3 Axis (Single Arm) / 5 : 5 Axis(Double Arm)
- Speed: H : Ultra high speed / L : high speed

T: Size of Telescopic (same as others when unstated)

Standard Specifications

1	A 12 Type 90 Degree Wrist Turn Unit
2	Parts Vacuum Circuit, Detect Circuit
3	Mechanical Parts Chuck Circuit
4	Wrist Turn Sequence Control
5	Parts Release & Runner Reject Position Setting
6	Priority Setting for Parts Release & Runner Reject
7	Parts & Runner Vertical Position Setting
8	Runner Reject Position (traverse forward/backward)
9	All Axis Palletizing (999 positions for each axis)
10	Definable Palletizing Direction for Horizontal and Traverse Strokes
11	Definable Shift Position and Direction for Horizontal and Traverse Strokes
12	Intermediate Traverse Wait Position
13	Teaching Data Verification Check Function
14	Login Function
15	Undercut Release Servo Operation
16	Initial Reject, BG Parts Reject, Overflow Reject → NG
17	Shutdown Circuit after Consecutive NG Reject
18	Definable Auxiliary Machine Interlock
19	Vertical Arm – Close to Mold Wait
20	Curved Approach on Mold Movement
21	Display Operation History Details and Data Saving
22	Maintenance Period Setting, Alarm Reminding
23	Teach Positioning On-The-Fly in Auto Mode (Max±0.3mm)
24	Energy-Saving Operation
25	Sampling Mode
26	Production Control Mode
27	My Pro Function
28	Temperature Sensor in the control box

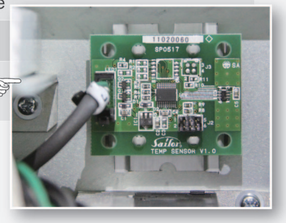

[Temperature Sensor]
The temperature in the control box exceeds the preset value, the robot is automatically stopped.

Optional Specifications

Programmed in Standard Software

1	AIII, AB, and D Type Wrist Turn Units
2	Vacuum Dual Systems Circuit Increased Capacity
3	Vacuum Circuit for Parts-Side Runner
4	Pivot Turn Sequence Control
5	Parts Unload 2 Positions (with vertical shift function)
6	Gate Cut at Traverse End 4 Positions/cycle
7	Gate Cut at Traverse End all Axis Direction Setting
8	Gate Cut Inside Chuck at Unload or Traverse Midway Position
9	Chuck Pitch Adjustment
10	Undercut Release Pneumatic Operation
11	Extension of Vertical, Horizontal, Traverse Strokes
12	Blower Specification
13	Vacuum Breaking Circuit (Dual circuits)
14	Energy-Saving Vacuum Circuit
15	Vacuum Multiple System Circuit (more than 3 circuits)
16	Stand for Touch Panel
17	Wireless function
18	Clean Room Specification
19	Controller internal-organs camera
20	Remote Function

*There will be shortages of the content of controlling or solenoid valve depends on the combination of the optional. Please contact us in advance.

Power	AC200V±10% 50/60Hz 3 Phases
Maximum Electric Power Required	3~6kVA
Normal Air Pressure	0.5~0.6MPa
Maximum Air Pressure Capacity	0.97MPa
Driving Method	AC Servo Motor
Accuracy of Repeatability	±0.1mm

Maximum Loading Capacity (including a chuck weight)

10kg : RZ-100ΣII~300ΣII (with standard strokes & A type wrist turn unit)
25kg : RZ-500ΣII~700ΣII (with standard strokes & AIII type wrist turn unit)

*Above Maximum loading capacities are our recommended value. Load more than the indicated values are also possible according to the adjustment of the operation speed.

Measurement

unit:mm

■ RZ-100ΣII

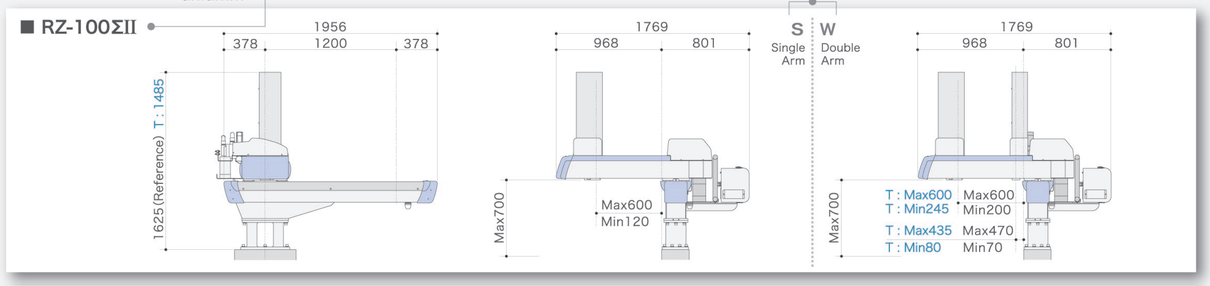

■ RZ-200ΣII/300ΣII

(*Mark)300ΣII

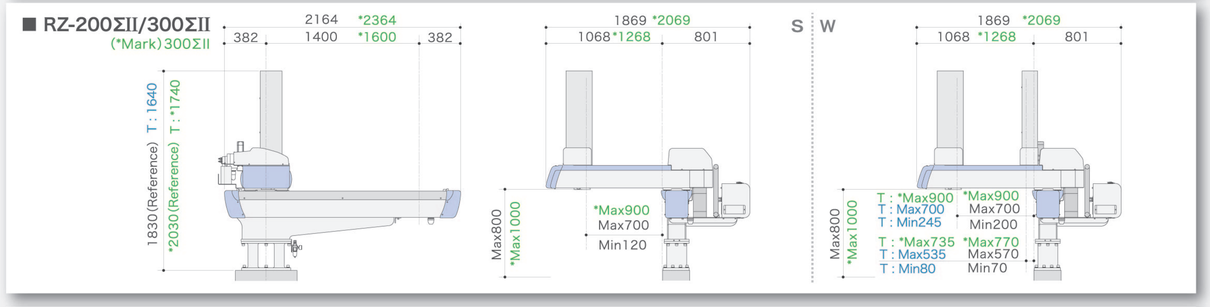

■ RZ-500ΣII

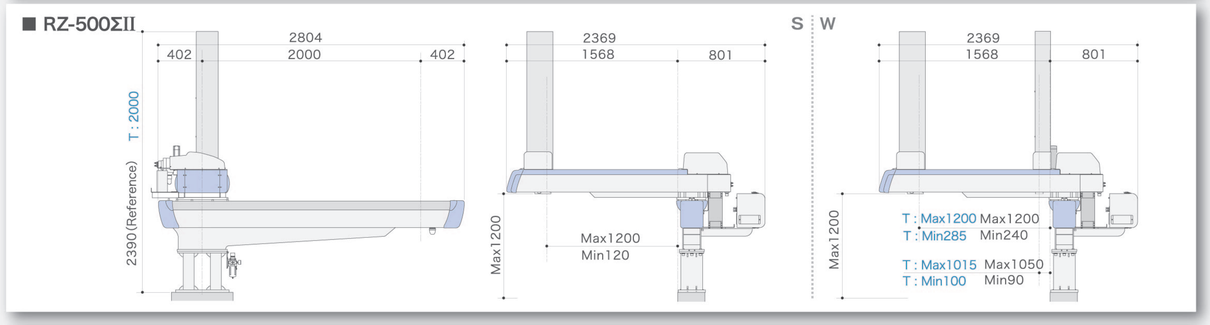

■ RZ-700ΣII

*Telescopic type is standard (Please contact us for single guide)

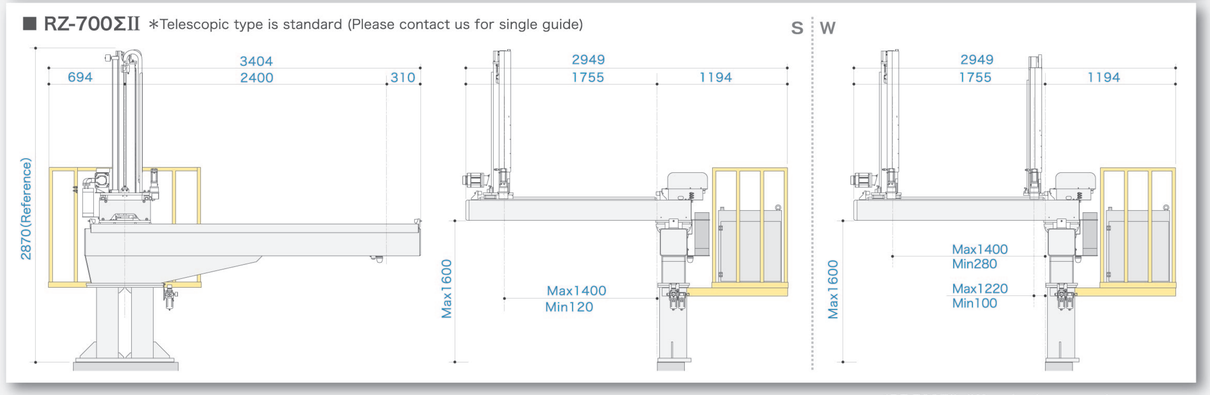

*RZ-700ΣII differs in shape , such as covers.